PYRAMID®

PHASE III

REGULATED POWER SUPPLY

MODEL: PS-7

SPECIFICATIONS:

Input	:	117V AC 60Hz
Output	:	13.8V DC
Capacity	:	7 AMPS With Surge Protection
Circuit Protection	:	2 AMPS 250V Cartridge Fuse

OPERATION:

1. Insert AC power plug into a 110 volt AC outlet.
2. Connect the power cord of your equipment (12–13.8V DC) to the output binding post terminals on the rear of the unit. Be sure that polarity is correct. The red positive (+) terminal and black negative (–) terminal are marked, reversal of polarity may damage your equipment.
3. Turn switch to "on". Red LED indicator will illuminate.
4. The input power is protected by the fuse which is located at the rear of the unit and can be replaced by unscrewing the fuse holder if the fuse is burnt out. Do not use a fuse larger than 2 amps. Use of heavier fuse may result in damage to this unit.
5. This unit has electronic overload protection with instant automatic reset function. If output is overloaded, the output power will automatically shut off and the red LED indicator will go out instantly. Release power cord of your equipment from the output terminals and check the actual power rating of your equipment. This unit will automatically reset instantly.

CAUTIONS:

1. Do not use with equipment requiring more than 7 amps.
2. Do not use outdoors. Do not expose unit to rain, moisture, water or any other liquids.
3. Do not remove cover in any case. Return to dealer for repair if damaged.
4. This unit has a special built-in feature that will shut the unit down if marked amperage is exceeded. This will avoid burn-out of your equipment and of unit. If unit does consistantly shut-down, this means you are drawing too much amperage. Return unit to place of purchase and upgrade to next available unit offering higher amperage. Please do not bypass or alter this circuit as it is there to protect you. Any alteration or misuse will void your warranty.

"DANGER"
HIGH VOLTAGE

REFER TO QUALIFIED TECHNICIAN FOR SERVICE.

PYRAMID®

PHASE III

REGULATED POWER SUPPLY

MODEL: PS-7
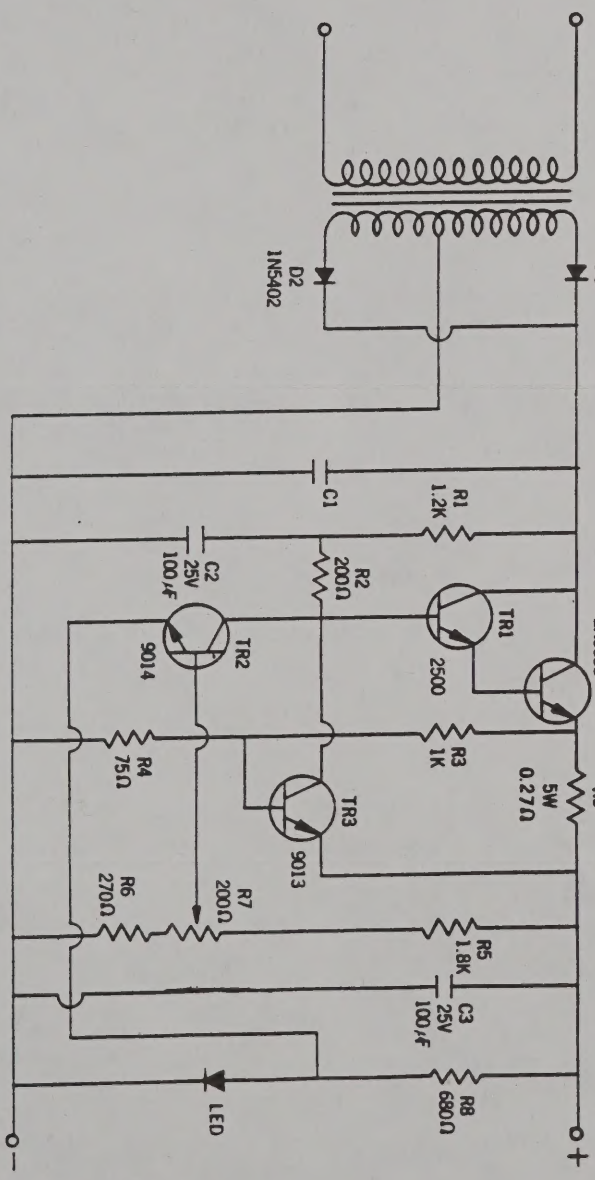
SPECIFICATIONS: